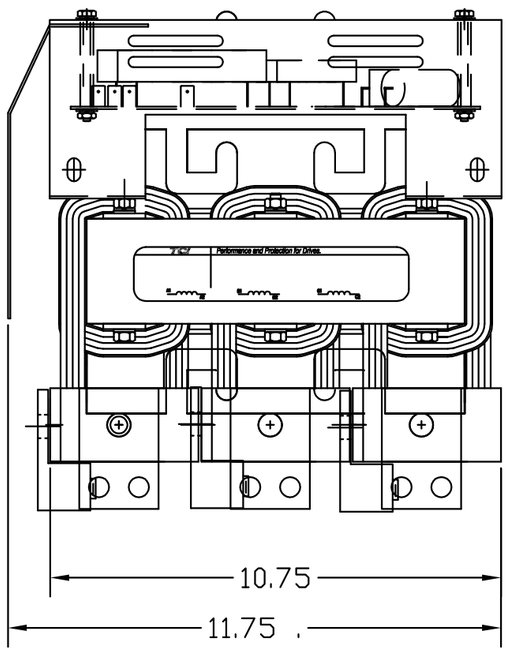

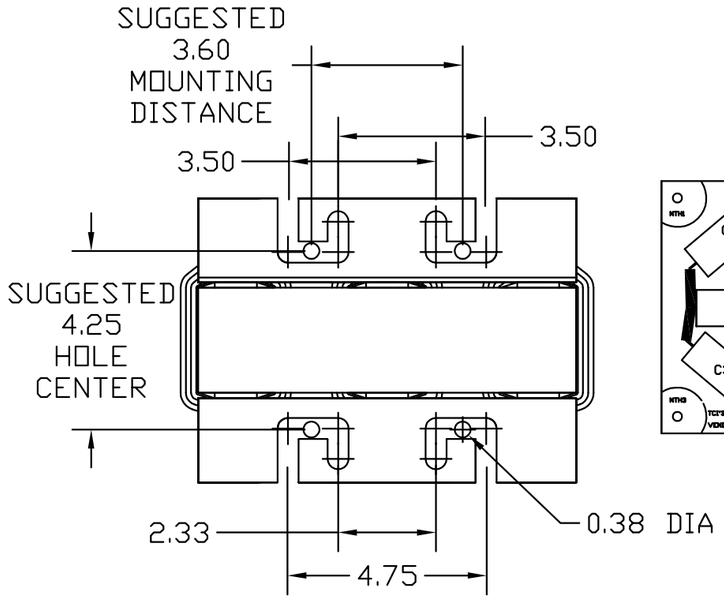

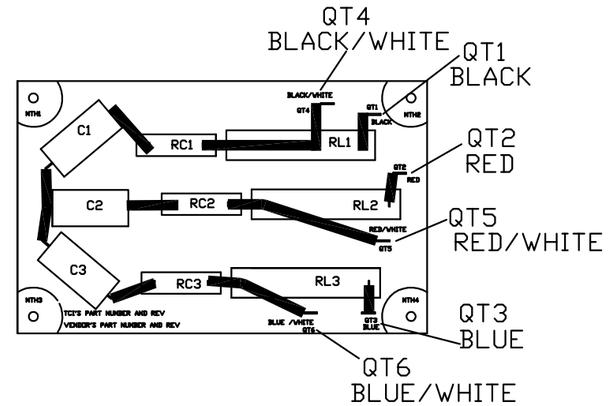

SPECIFICATIONS:	
AMP.	362
VOLT	240-600
PHASE	3
HZ	60
WEIGHT, LBS.	80
OPEN VERSION	

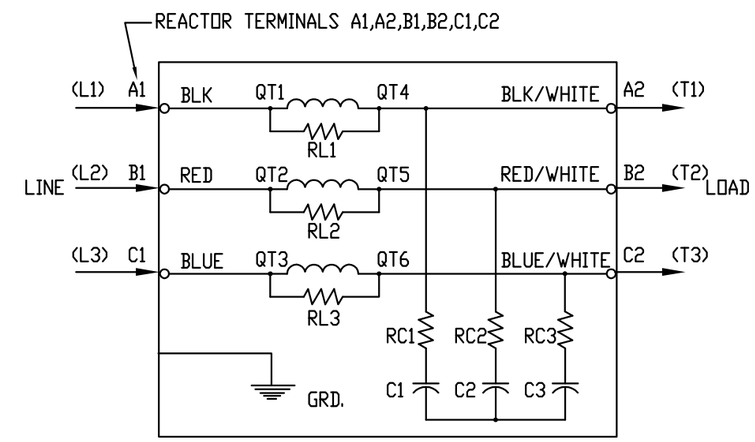

REACTOR AND BOARD ASSEMBLY CONNECTIONS

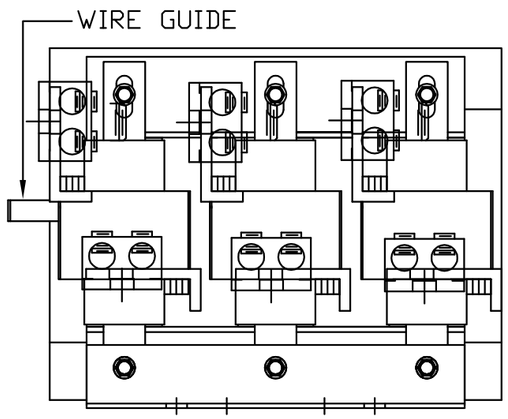

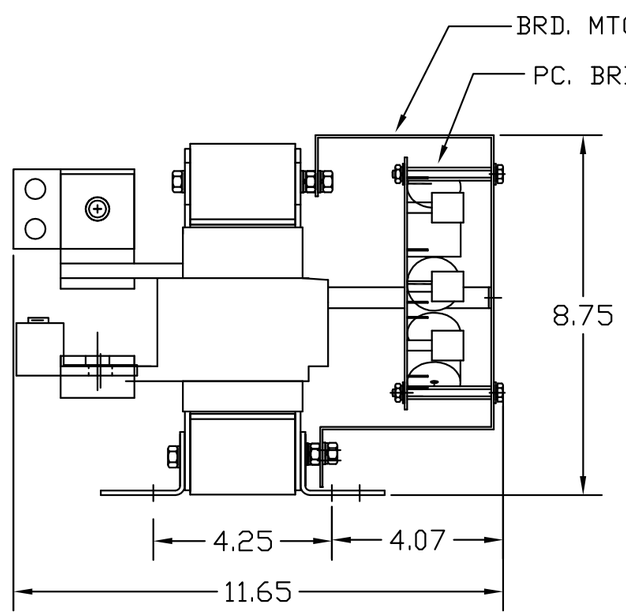

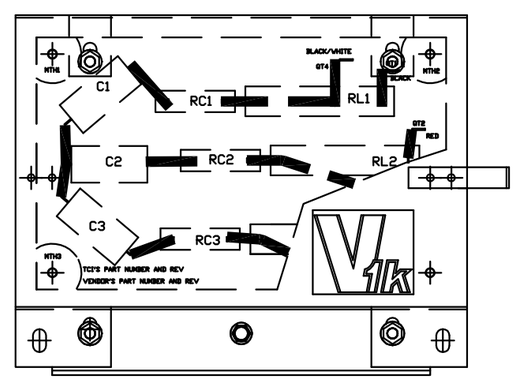

REAR VIEW

TOLERANCE UNLESS OTHERWISE NOTED:	
MOUNTING	+/-.06
OVERALL	+/-.12

"SEE V1K INSTALLATION GUIDE FOR TERMINAL WIRE SIZE AND TORQUE"

CUSTOMER IS RESPONSIBLE FOR INSTALLATION TO MEET ALL NATIONAL AND LOCAL ELECTRICAL CODES.

TCI, LLC CLAIMS PROPRIETARY RIGHTS IN THE MATERIAL HEREIN DISCLOSED. IT IS SUPPLIED WITHOUT PREDJUDICE TO ANY PATENT RIGHTS OF TCI AND MAY NOT BE REPRODUCED OR USED TO MANUFACTURE ANYTHING SHOWN THEREIN WITHOUT WRITTEN PERMISSION FROM TCI.

NO	REVISION	DATE	BY
G	3216 ADD SEE GUIDE	10/29/14	DSW

TOLERANCES (EXCEPT AS NOTED)
DECIMAL .XX ±.03 .XXX±.005
FRACTIONAL ± 1/32
ANGULAR ± 1/2°

TCI
W132 N10611 GRANT DRIVE
GERMANTOWN, WI 53022

V1K362A00, OUTPUT FILTER
362 AMP, OPEN VERSION

DRN. BY	DATE	DWG. NO.
RJC	5/20/05	102656DG
SCALE NONE	SIZE B	SHT. 1 OF1